4.1 POJAČALA SNAGE

KLASA A

Klasifikacija

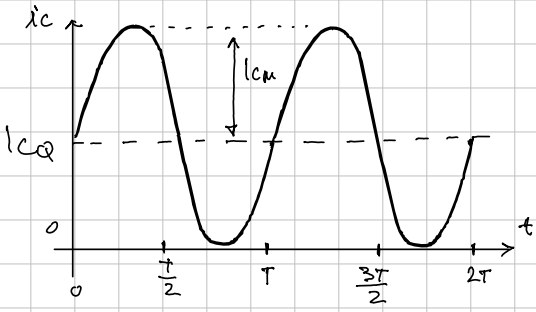

klasa A

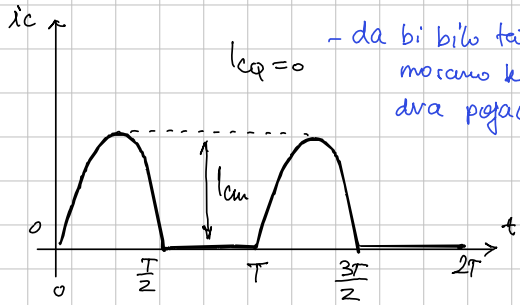

klasa B

– da bi bilo tako moramo koristiti dva pojačala

$I_{CQ} < I_{cm} \rightarrow$ forsiramo u NAP

Pojačalo klase A

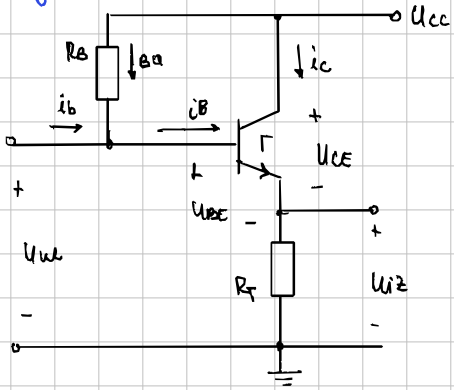

za dobar prijenos snage: $R_{iz} \approx R_T$ ($\approx 4\,\Omega$)

↳ BipT SZC,

FetovI SZD

za trošila malog otpora: SZE

pojačalo snage vrlo često (skoro uvijek) u sklopu kaskadnih

Snaga izvora napajanja

$$p_{CC}(t) = U_{CC}(\cancel{I_{BQ}} + i_C) \approx U_{CC}(I_{CQ} + i_C) = U_{CC}(I_{CQ} + I_{cm}\sin\omega t)$$

$$\text{srednja vr.}: \quad P_{CC} = \frac{1}{T}\int_0^T p_{CC}(t)\,dt = \frac{1}{2\pi}\int_0^{2\pi} U_{CC}(I_{CQ} + I_{cm}\sin\omega t)\,d\omega t = \underline{\underline{U_{CC}\cdot I_{CQ}}}$$

stalna

Snaga trošila

$$p_{RT}(t) = R_T \cdot i_C^2 = R_T(I_{CQ} + i_C)^2 = R_T(I_{CQ}^2 + 2I_{CQ}\cdot I_{cm}\sin\omega t + I_{cm}^2\sin^2\omega t)$$

$$\text{srednja:} \quad P_{RT} = \frac{1}{T}\int_0^T p_{RT}(t)\,dt = R_T I_{CQ}^2 + R_T\left(\frac{I_{cm}^2}{2}\right) = R_T \cdot I_{CQ}^2 + R_T \cdot I_{ceff}^2$$

preko efektivne

$$\underline{\underline{P_{RT} = P_{RT(DC)} + P_{RT(AC)}}}$$

Snaga tranzistora

$$p_T(t) = \underbrace{\cancel{U_{BE}\cdot i_B}}_{\approx 0} + U_{CE}\cdot i_C = U_{CE}\, i_C \approx (U_{CC} - R_T\cdot i_C)\, i_C = U_{CC}\cdot i_C - R_T\cdot i_C^2 = p_{CC}(t) - p_{RT}(t)$$

$$P_T = \frac{1}{T}\int_0^T p_T(t)\,dt = \underline{\underline{P_{CC} - P_{RT}}}$$

$$P_{T\,max} = P_{CC} - P_{RT(DC)} = U_{CC} I_{CQ} - R_T I_{CQ}^2$$

nema signala tj. ostaje samo DC

Djelotvornost

$$\eta = \frac{P_{RT(AC)}}{P_{CC}} = \frac{R_T\,(I_{cm}^2/2)}{U_{CC}\,I_{CQ}}$$

→ za maks djelotvornost ⟹ maks amplituda I_{cm}

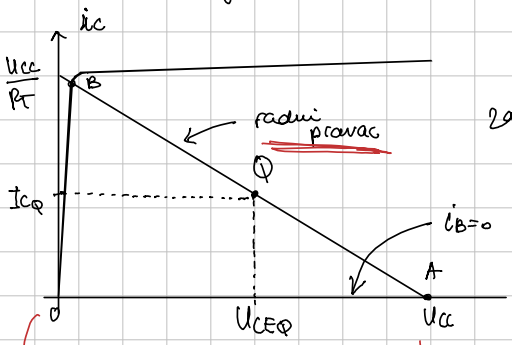

$U_{CE} = U_{CC} - R_C \cdot i_C$

$U_{CC} = R_C \cdot i_C$

$U_{CE} = U_{CC}$

SRT na sredini tog pravca

zanemarimo (B)

$$U_{CEQ} = \frac{U_{CC}}{2} \qquad I_{CQ} = \frac{U_{CC} - U_{CEQ}}{R_T} = \frac{U_{CC}}{2R_T}$$

$$\eta_{max} = \frac{R_T\,(I_{cm,max}^2/2)}{U_{CC}\cdot I_{CQ}} = \frac{R_T \cdot I_{CQ}^2}{2U_{CC}\,I_{CQ}} = \frac{1}{4} = 25\%$$

mala djelotv.
→ loše pojačalo

Raspodjela snage

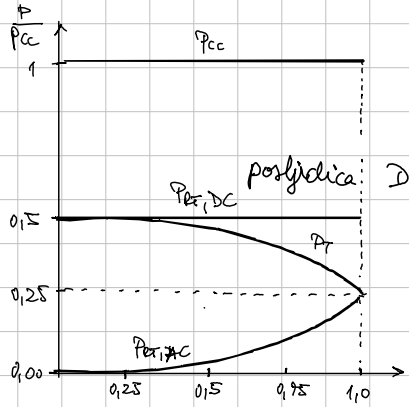

posljedica: DC → pola odlazi na P_{RT}

Primjer 4. 1) klase A

$U_{CC} = 15V$ $\quad P_{RT\,max} = ?$ $\quad R_T = 100\,\Omega$ $\quad R_B = ?$ $\quad \beta = 80,\ U_\gamma = 0.7V$

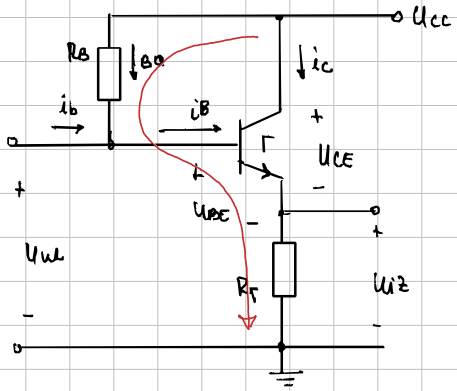

$$U_{CEQ} = U_{CC} - R_T \cdot I_C$$

$$U_{CEQ} = \frac{U_{CC}}{2} \rightarrow \text{sredina} \rightarrow U_{CEQ} = 7.5V$$

$$I_{CQ} = \frac{U_{CC}}{2\cdot R_T} \longrightarrow I_{CQ} = 7.5mA$$

$$I_{cm,max} = I_{CQ}$$

$$P_{RT\,max} = \frac{R_T\,I_{cm,max}^2}{2} = \frac{R_T \cdot I_{CQ}^2}{2}$$

$$\boxed{P_{RT,max} = 281\,mV}$$

$U_{CC} = R_B \cdot I_{BQ} + U_{BEQ} + R_T \cdot I_{CQ}$

$U_{BEQ} = U_\gamma$

$$R_B = \frac{U_{CC} - U_\gamma - R_T \cdot I_{CQ}}{I_{BQ}} = 7.3k\Omega$$